VHFER

LEARN BY DOING

50 MC. AND UP

Volume 5, No. 1 Jan.-Feb. 1967

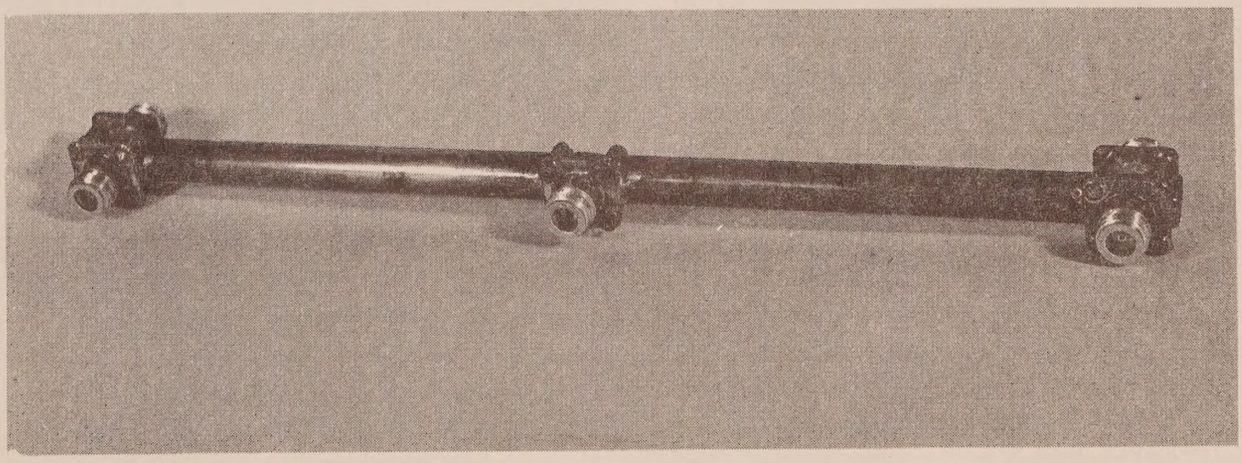

A POWER DIVIDER FOR AN ARRAY OF YAGIS

Nuvistor
CONVERTER

- Noise Figure less than 3 d.b. over full 4 Mc. Bandwidth.

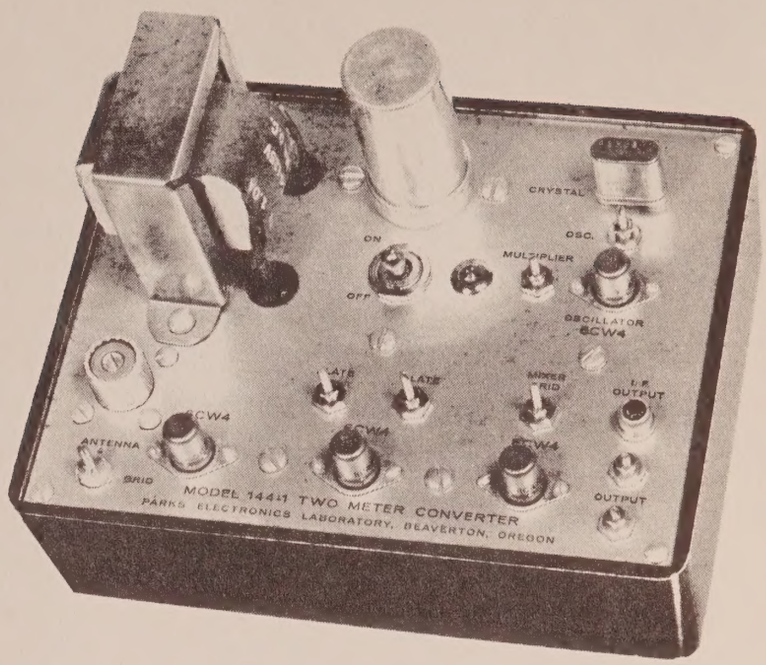

$60.00 POSTPAID

Here is the converter that has been accepted by advanced hams all over the U. S. A proven performer for weak-signal work. I.F. ranges available put 144 Mc. at 7, 10, 14, 21, 22, 24, 26, 27, 28, 30.5 or 50 Mc. Choice of connectors: UHF in, phono out (shown) or BNC in and out. Available from stock.

Just think for a moment. How many brands of VHF converters are available today. Really there are only two principal manufacturers--one that sells through dealers and one that doesn't, (that's us). Yet if you look back in the ham magazines you'll see many ads of little companies that have made their little flurry, wild claims, and then laid down and died. Parks converters have been around for quite a few years. You don't stay in business if you don't have something people want. Of course hams talk to each other a lot, and they describe their equipment. A lot of the big DX names have Parks equipment--moonbouncers too. Give a listen on the bands and ask the DX boys about Parks converters. Many of you might think you'd be more likely to buy if we sold the converter as a kit at a lower price. No soap. We don't want our name linked with anything you put together yourself. I couldn't put one of our converters together and be sure of how it really was working--without test equipment. And 99.999% of you couldn't either. We've made many hundreds of converters and I can tell you for sure a lot of them don't tune up right at first. A little difference in the way a coil is wound can make the difference between making specs and not making specs., and there are a number of other things that happen. If you buy a Parks converter you know you've bought a standard of performance, that it's been aligned and the noise figure checked to prove the converter meets or exceeds the advertised spec. And if you keep your c.p. hands off the slugs it will stay that way for hundreds of listening hours. While tube failure can happen, it is surprisingly rare. The little nuvistor keeps its noise figure well and it tolerates r.f. leakage from your rig. If you're waiting for a transistor converter that works better than ours, you may have a long wait. A db. is about the most you could gain, and you can't hear that. A preamp. could always be added. Parks converters are on the shelf with same-day shipment being the rule. Prices are postpaid, $2.50 more for air mail.

PARKS ELECTRONICS LABORATORY

419 S.W. FIRST AVENUE

BEAVERTON, OREGON 97005

Moonbounce Newsletter

by Victor A. Michael, W3SDZ
Box 345, Milton, Penna.

Close on the heels of my written report of the VK3ATN, K2MWA/2, I received word that K6MYC had finally succeeded in a two-way contact with VK3ATN after several near misses. I have also had the pleasure of hearing the tapes of these contacts, and I must say they are extremely good.

Two meters is again in the news with the two-way contacts between W6DNG and F8DO. While I haven't received any information concerning the equipment set up on either end of this history making effort, I'm sure the complete details will be coming along.

In the last few days, my mail has been filled with requests concerning these two meter efforts. The number one confusion among VHFERs is what band to make a moonbounce effort on. On the one hand, there is the completely logical point of view from the engineering people who will tell you 1296 is the place to go. If I can be illogical for a moment and speak as an amateur, I would say that the work of VK3ATN, W6DNG and K6MYC make an excellent case for the amateur point of view. As I see it, the amateur point of view is different from the engineer's point of view in several respects. When you do something from a professional point of view, you do it with a purpose in mind which should have a reasonable chance for success. As an amateur you are free from this requirement. You can pursue anything you want, for whatever purpose, with no penalty for lack of success. If you had pleasure in this pursuit, that's all that counts! You may even be successful at proving something that no person thought possible! Isn't that what ham radio is all about?

I will leave the two meter story of how to do it to the people who are doing it. The project we are engrossed in at the moment is a large phased array for six meters. The reason we are at work on this project is that VK3ATN would like to make a try on six meters. Since I wrote the last Newsletter, I've learned in more detail the plans on the VK end. Ray is planning a new type of rhombic array for six meters which should produce about 30db of gain. This will mean that the US end of the path should have about 22db antenna gain along with a full KW of transmitter power.

I thought it might be interesting to give you a brief discussion of the system we're working on here. Basically the array will be nine cross-polarized 7 element (14 elements on a boom) yagis on 22 foot booms. Since the spacing between the arrays has to be about 30 feet, obviously it would be difficult to rotate such an array as a single unit. The next best thing one can do is rotate each yagi separately. To do this, I'm placing each yagi on a small polar mount close to the ground. All of the arrays will be placed in line on a north-south line about 240 feet long. Now, this will produce a fan beam array, i.e. the beamwidth in the north-south direction or declination will be very narrow (perhaps as small as a few degrees) while the east-west or hour angle beamwidth will be very broad--over 30 degrees. Now this makes an ideal moonbounce situation, because the declination of the moon changes very slowly over a period of a day (less than a few degrees), but the hour angle changes nearly 15 degrees per hour. Each of the eight polar mounts will be set by moving the mount by hand to a specified position and locking it in place. Since this setting should hold for over an hour at a time, there is no need to put motors on the mounts.

There is a price to pay for this simplification of the mount. With the exception of a few select positions, when the phase centers of the arrays are in a common plane, you have to provide a system for adjusting the phase to each of the arrays to correct for the fact that phase centers don't remain in a common plane. If you don't fully understand this concept, don't be alarmed. Once we complete the array, I will write up the details.

The part of the system we're working on right now is the phasor. Actually we're having reasonably good results using lengths of RG58 A/U coax switched by ceramic wafer switches. While it is "gilding the lily" we are using a coarse and a fine switching arrangement in each phasor. The first switch has 36 degree steps (ten steps) and the second switch has 3.6 degree steps. Initial measurements conducted by W2IMU on a breadboard model look reasonably good on a Vector Voltmeter. The switch introduces about 10 degrees additional phase shift and a VSWR of 1.10 to 1. This all looks very reasonable and can be "lived with" as long as all variations are taken into account.

The phased array is a very reasonable way to go on six and two meters. For the reduction of mechanical complexity, the electrical problems are increased somewhat. The advantage is that the electrical problems can be worked on alone, while moving a structure 100 feet across by 40 feet high is too difficult to think about--even for a group effort. The only other alternative is to build a fixed array, but you then sacrifice a lot of moon time. With most amateur systems, it is an advantage to be able to follow the moon orbit for at least an hour or two per day.

The snow is still falling in Pa. as I write this, and the late winter winds that rake this mountain top did a nice job of tearing the counter weight arms off my dish. As you can well imagine, I'm looking for spring as much as any antenna-minded VHFER.

LOW IMPEDANCE PARALLEL TRANSMISSION LINES

by Gerald N. Johnson, KØCQA*

Have you ever tried to match a 100-ohm balanced load to a 50-ohm feed with a quarter-wave open-line Q-section and a 1:1 balun using the handbook formula for characteristic impedance and worked it out--only to find that the center to center spacing was less than the conductor size? The problem is that the commonly used formula has, in fine print, the restriction that the spacing must be very much greater than the conductor size. A few of the better references [1, 2] give a formula without that restriction. It is

$$Z_o = 120 \text{ arccosh } \frac{D}{d}, \text{ D = spacing, d = wire diameter.}$$

Unfortunately in most ham publications the formula looks like hieroglyphics as far as being useful is concerned. The IT&T Handbook, as it is known, not only has tables of cosh x, but also has curves for the characteristic impedance of open wire transmission lines plotted.[3] For Impedance values less than 250 ohms, both curves (the right and the wrong) are plotted in the figure. As larger impedance values are checked, the curves continue to come together. For Z_o = 225 ohms, the error in using the simpler formula is about 1%, but for lower impedances, the error rapidly becomes greater. Note that the simplified formula indicates that the lowest possible impedance for open wire line would be 83.1 ohms but this would be with the two conductors shorted together for their entire length. In the table below are listed the exact D/d ratios for common impedances. These and the curve both assume perfect air insulation with no supports.

Z_o	D/d
0	1.000
25	1.0216
37.5	1.0492
50	1.0882
70.7	1.1784
75	1.2017

Z_o	D/d
100	1.3678
141.4	1.7793
150	1.888
200	2.7672
225	3.350

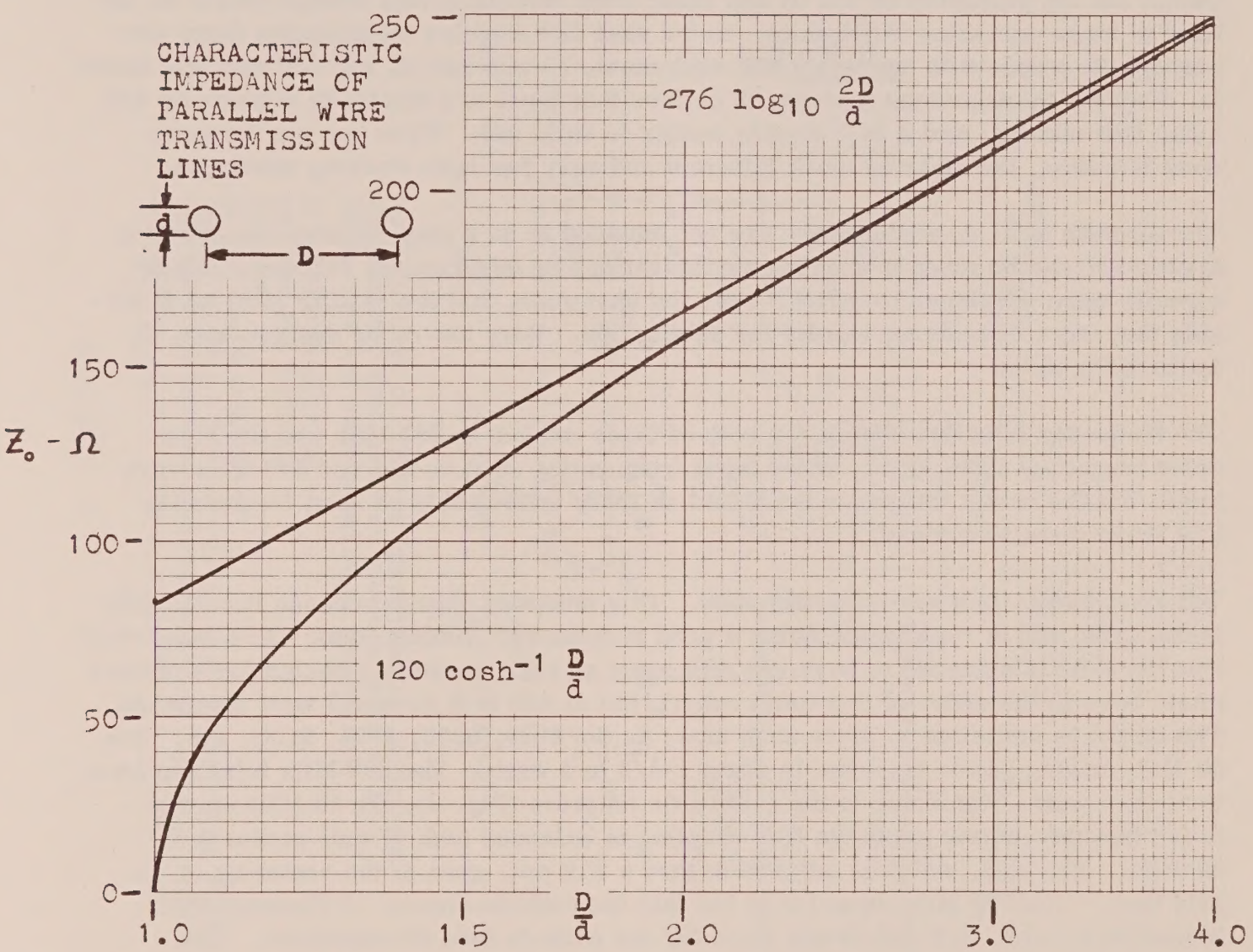

*221 Abraham Drive, Ames, Iowa 50010

[1]International Telephone and Telegraph Corporation, Reference Data for Radio Engineers, fourth edition, 1956.

[2]Jasik, Antennas, McGraw-Hill Book Company, New York.

[3]IT&T, p. 588.

VHFER magazine is published every other month by Parks Electronics Lab., 419 S.W. First, Beaverton, Ore. 97005. Subscription rates: U. S. & possessions, $1.50 per year, Canada & Mexico, $1.75 per year, others $2 per year. Second class postage paid at Beaverton, Oregon 97005.

PRACTICAL HETERODYNE LOW LEVEL TRANSMITTER MIXERS FOR 432 MHz

by G.A. (Al) Olcott, K7ICW/AA7ICW*
and J. Harness, K7RKH/AA7RKH

One of the big problems on 432 or any other UHF band is to find enough people on the band to make operation worthwhile. In the vast Los Angeles megalopolis there are perhaps 30 people with operating 432 equipment, 15 who use it, and 100 who talk about it. Reports in magazines lead one to believe that there are hundreds of hams on 432 using SSB mixers, and it is a simple matter to build one. When you pin someone down however, the story is much different and very few have working machines.

The circuits to be described here are not intended to be a step-by-step construction article and can be made in varying configurations by experienced VHFers. These circuits were developed by K7RKH over the past year, and the results were so favorable they were considered worthy for publication. Very few other designs have appeared in print.

The frequency injection source for both of these models is 382 MHz and the input drive frequency is 50 MHz. Other input frequencies such as 144 and 220 MHz were tried, but the output frequency contained so many undesirable product frequencies that these were abandoned.

The first model built used the 6360 tube. This tube was chosen because it was fairly inexpensive and is rapidly becoming a good surplus and junkbox item. It is recognized that the 6360 is expected to have low efficiency at 432. A similar design for 2 meters might have in the order of 6-8 watts output, but at 432 it is around 1 watt maximum. The output is sufficient to drive such tubes as the 6939, 6252, 5894, 2C39, etc. The 50 MHz driving power required is about 1-1/2 to 2 watts. The 382 MHz injection level is about 1 watt. Referring to the schematic diagram (Fig. 1), the 50 MHz energy is fed into the control grids via link coupling to balanced tank circuit resonant to 50 MHz. The bias, which is adjustable thru a 25K pot, goes to the centertap of the grid tank. The 382 MHz injection is fed into the cathode direct. A filament choke is used to prevent R.F. feedback from the hot cathode feed arrangement. The regulated screen voltage is applied thru a de-coupling resistor with a by-pass capacitor at the feed point. No by-pass or de-coupling capacitor is desired or necessary at the screen itself because the interelectrode capacity is sufficient at this frequency for self de-coupling. The output tank (L3/C2) uses half-wave lines similar to ARRL handbook circuits. The output link is a standard design, although other supposedly more efficient designs were tried. The orientation of the link (L4) is unimportant, but optimum loose coupling is desirable for maximum output. It has been found that the use of flat strap output coupling links at 432 have too low inductance for proper reactive and impedance match and tend to reduce power transfer.

The second model built uses the 6939 tube (see Fig. 2). This design was evolved around a tube that will operate at 432 efficiently. The major drawback is that this

*510 S. Rose St., Las Vegas, Nev. 89106

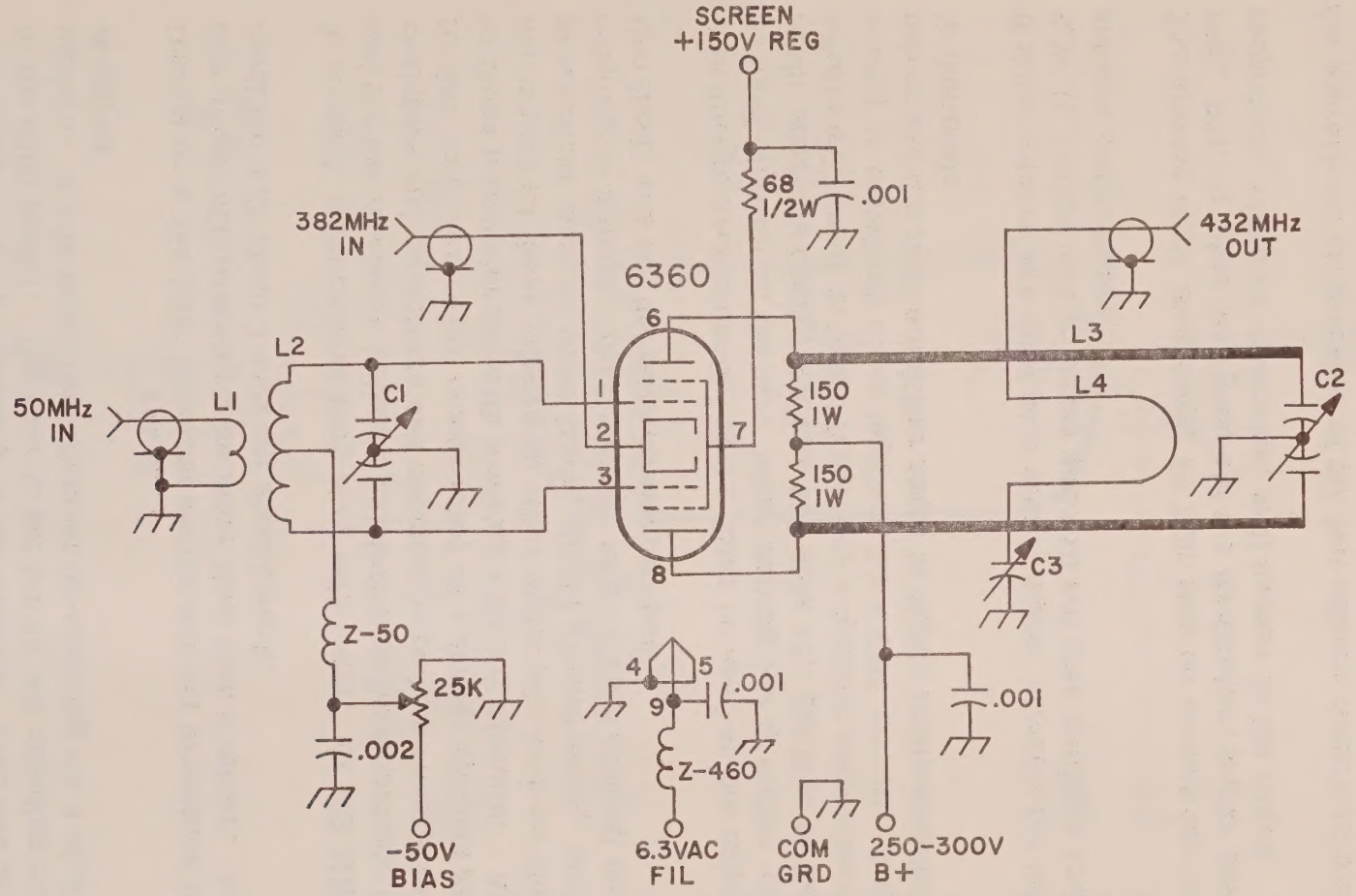

NOTE- UNLESS OTHERWISE INDICATED ALL CAPACITORS ARE CERAMIC DISC, 500DCWV MINIMUM, VALUE IN UF; RESISTORS ARE CARBON, VALUE IN OHMS, ±10%.

C1 — 8 PF PER SECTION
C2 — 5 PF PER SECTION
C3 — 8 PF
L1 — 2T No. 26 AROUND L2
L2 — 8T No. 26 C.T. 5/8 (1.6 Cm) I.D., 1 WIRE DIA. BETWEEN TURNS
L3 — 4-1/4 (10.3 Cm) LONG No. 12 (2 EA.), SPACED 1/2 (1.2 Cm) APART
L4 — HAIRPIN LOOP 3-1/2 (6.35 Cm) LONG No. 12, 1/2 (1.2 Cm) DIA. ADJ. TO L3

FIGURE 1

tube is not available surplus and costs over $10. The advantages are that this tube has more output power with less drive and injection, less than half that of the 6360. The 382 MHz injection is fed into the cathode thru a tapped inductor resonant between 382 and 432 MHz. This is effectively a tapped R.F. choke and care must be exercised not to resonate this coil at 432 MHz or output instability will result. The tap which is critical, provides an impedance match and expends the R.F. driving power efficiently for proper loading of the cathode. Bias and screen methods are similar to the 6360 model. The bias is set for 35 MA standing current with no drive on both models. It was found that filament de-coupling via a choke in this model was not required.

Details on a 382 MHz injection source are not presented in this article, and construction of one will probably take more time than a mixer. Any stable exciter suitably modified with about 1 watt out should work.

In general, mixers have very poor efficiency. At 432 MHz this is especially true and the use of choice selected hardware such as ceramic tube sockets, good quality resistors and capacitors and constant impedance connectors is a must. The particular units here were constructed on a copper chassis and this is recommended to those inexperienced with working with 432 circuits. Advanced experimenters can construct these mixers on other materials such as aluminum, but the necessary precautions such as short leads, direct ground paths, and proper by-passing/decoupling is a must. Shielding per se was not a critical factor here as power generation itself was not the desired end product.

It is always recommended that a filter be used on the output of any mixer should it be used directly on the air. When driving low Q buffer or amplifier stages, some of the spurious energy such as 382 MHz will get thru to the output. Some odd loading effects will occur to broad frequency amplifier stages because the 382 and 432 MHz energy is relatively close together for a UHF circuit. A cavity filter between the mixer and the final amplifier stage is highly recommended. Even an output filter is desirable.

If these mixers are used as a source signal directly for tuning up 432 antennas, the S.W.R. bridge will go crazy and will not give readings truly indicative of tuning or antenna performance.

The driving input frequency, 50 MHz may be almost any mode, CW, A3, SSB, FM, FSK, PM, or what have you, but the modulation/purity index must be clean or the responses, clean or otherwise, will appear in the output.

An operational comparison of the two mixers described would give some surprising results. For instance, the 6360 version sounds better quality-wise when compared to the 6939 model when used with an SSB driver. This is based upon listening to the two versions loaded to the same equipment and antennas and switched back and forth for comparison.

If you have any questions relative to these mixers, write, send details and self-addressed stamped envelope to K7ICW.

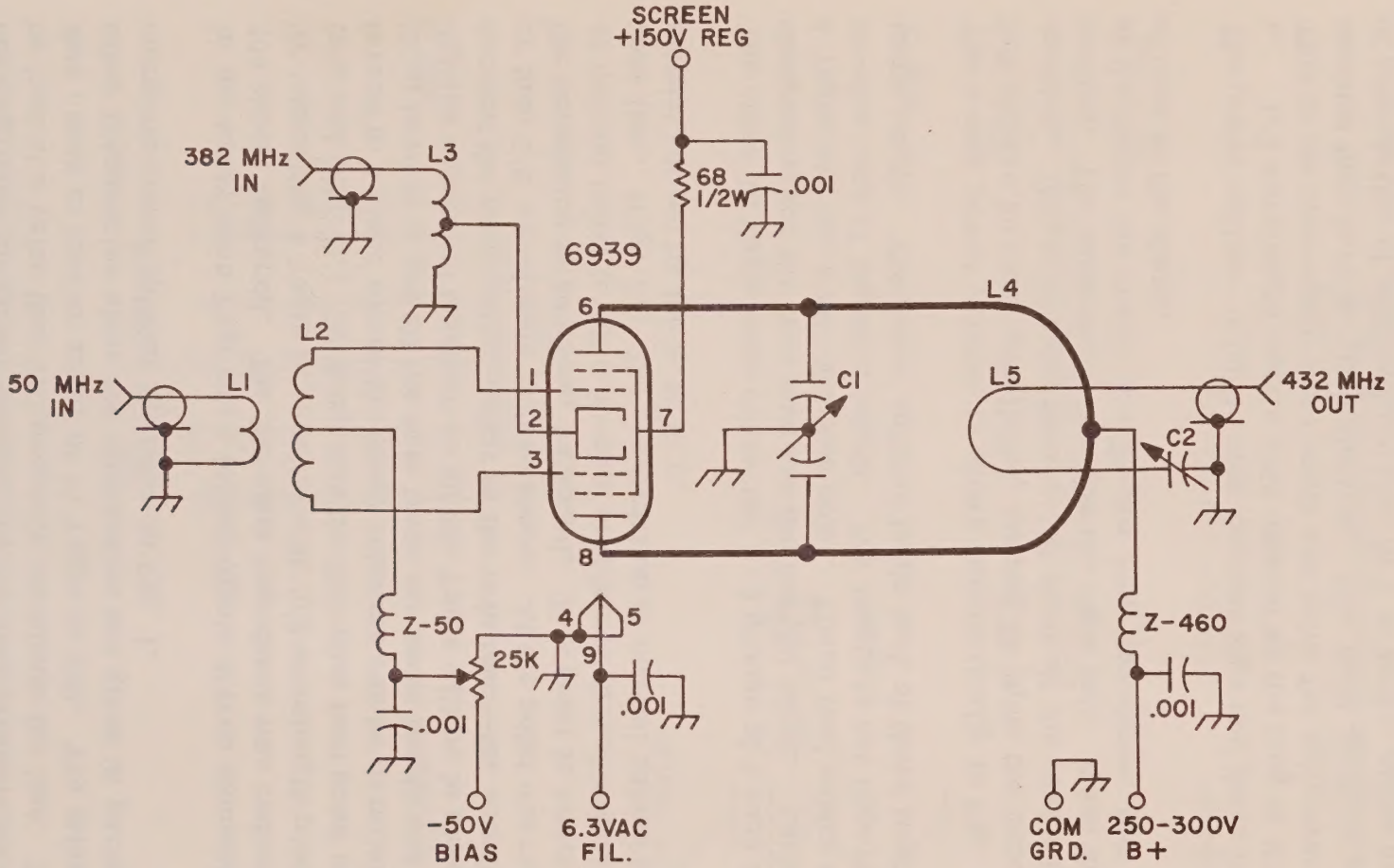

NOTE—UNLESS OTHERWISE INDICATED ALL CAPACITORS ARE CERAMIC DISC, 500DCWV MINIMUM, VALUE IN UF; RESISTORS ARE CARBON, VALUE IN OHMS, ±10%.

C1—8 PF PER SECTION, LOCATED 15/16 (2.38 Cm) FROM CLOSED END OF L4.
C2—8 PF
L1—2T No. 22 AROUND L2.
L2—10T No. 22 3/4 (1.9 Cm) I.D., 1 (2.54 Cm) LONG
L3—2-1/2T No. 18 3/8 (.95Cm) I.D., TAPPED 1-1/4T FROM GRD.
L4—HAIRPIN LOOP 2-1/16 (5.24Cm) LONG No. 12, 1/2 (1.27 Cm) WIDE
L5—HAIRPIN LOOP 3-1/2 (8.89Cm) LONG No. 12, PLACED 1/8 (.32 Cm) AWAY FROM L4

FIGURE 2

A POWER SPLITTER FOR VHF-UHF ANTENNA ARRAYS

by Jim Geddes, K7ZIR*

When more than one load is to be supplied power from a single source some means of dividing the power must be employed. When the load is an amateur antenna array, not only must the power be split but the load presented to the transmission line must be kept at a value that will properly terminate the line. I will describe the method that I used to feed an array of 16 Yagis on 432. The information will also apply to other frequencies since the dimensions are given in parts of a wavelength. The complete power splitter is shown in Fig. 1.

In my array each Yagi has a folded-dipole driven element with an impedance of 200 ohms, balanced. The 200-ohm impedance was reduced to 50 ohms, balanced, by connecting 4 Yagis in parallel with 5/2 wavelength pieces of 300-ohm tubular twinlead (Fig. 2.) By doing this the 200-ohm feed point of the Yagis can be transferred to a place where the other antennas can be paralleled with it. The important thing here is to get all the twin leads the same length and the same side of all the dipoles connected together so all the Yagis will be in phase. Be sure you take into account the propagation factor of the twin lead--the actual length of line will be shorter than 5/2 wavelength in free space. At the point where the lines come together the impedance is 50 ohms, balanced. This point is attached to a 50-ohm "beer can" or coaxial balun to get a 50-ohm unbalanced transformation for attachment to 50-ohm coax line. (Fig. 3.) The construction of coaxial baluns is described in the VHF manual put out by the A.R.R.L.

The other 12 Yagis were connected in 3 groups of 4 each the same way using identical dimensions for the twin lead and the coaxial balun. Each of the four groups of 4 Yagis now has a 50-ohm feed point. These feed points are fed with four pieces of 50-ohm coax of identical length. The length is not important as long as all are the same length. The power splitter feeds each of these lengths of coax (Fig. 4).

The 4-way power splitter is shown schematically in Fig. 5. The two outputs on the left end are 50 ohms paralleled, making 25 ohms the impedance at that end of the splitter. This is transformed to 100 ohms at the center by the quarter wave 50-ohm section. The same holds true for the right half. When the two halves are paralleled at the center the result is a 50-ohm feed impedance, just right for your long length of coax to the shack.

The power splitter is built using the drawings and these hints:

1. 1/4 wavelength equals 2952 divided by the freq in MHz. Result is in inches. This This is the free-space wavelength and holds for the power splitter and coaxial balun because they have an air dielectric. You must multiply your result by the velocity of propagation of twinlead and also by 2 to arrive at the proper dimension for an electrical half wave of twinlead.
2. The UG58 type N panel connectors have a 3/8" shoulder which fits the 3/8" hole of the outer conductor of the power splitter.
3. The center pin of the UG58 connectors on the ends are filed to a 45 degree angle

*5955 S. W. 179th
Beaverton, Oregon 97005

and the connectors positioned so that the slopes fit together and go through the 1/8" hole in the center conductor of the power splitter. (Fig. 6.)

4. Assembly: Put the center conductor inside the outer conductor. Put a UG58 connector on one side of one end. Put the 1/8" hole in the center conductor over the center pin. Put the other UG 58 on the same end and put the screws in to hold both connectors. Repeat at the other end of the splitter and then do the center. Use a big soldering iron. To make a water-tight seal, the connectors can be soldered to the outer shell and end caps put on. Another cover is required over the access hole to the center connector.

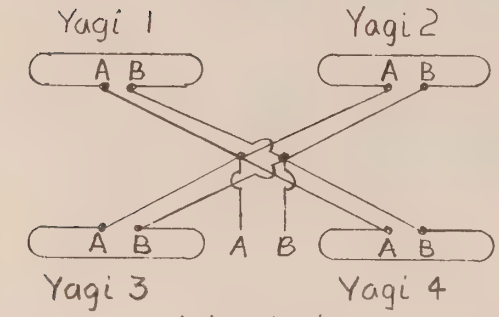

Each twinlead line to the center $\frac{\lambda}{2} \times K$ long

Fig. 2

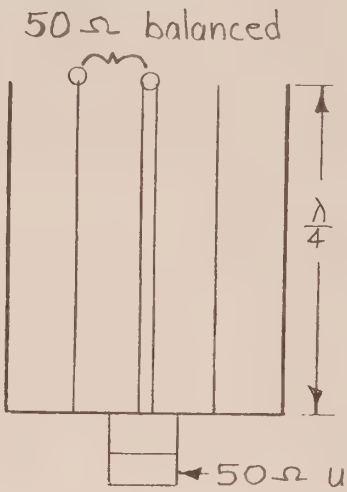

Fig. 3

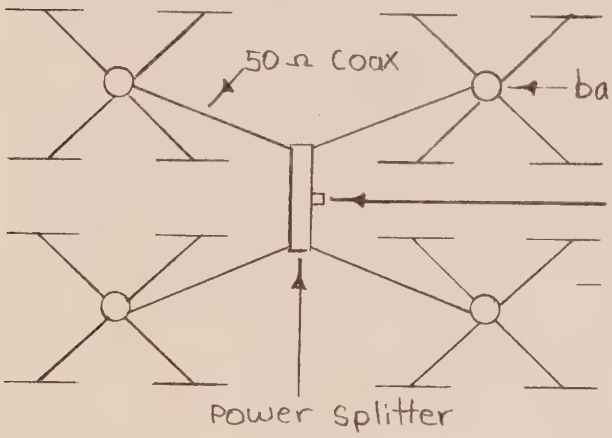

Fig. 4

Fig. 5

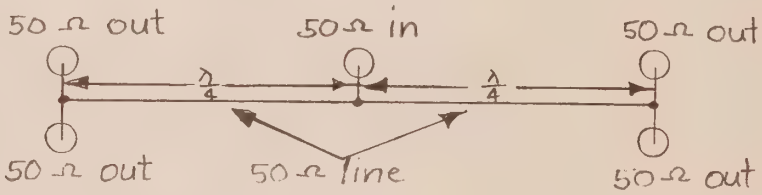

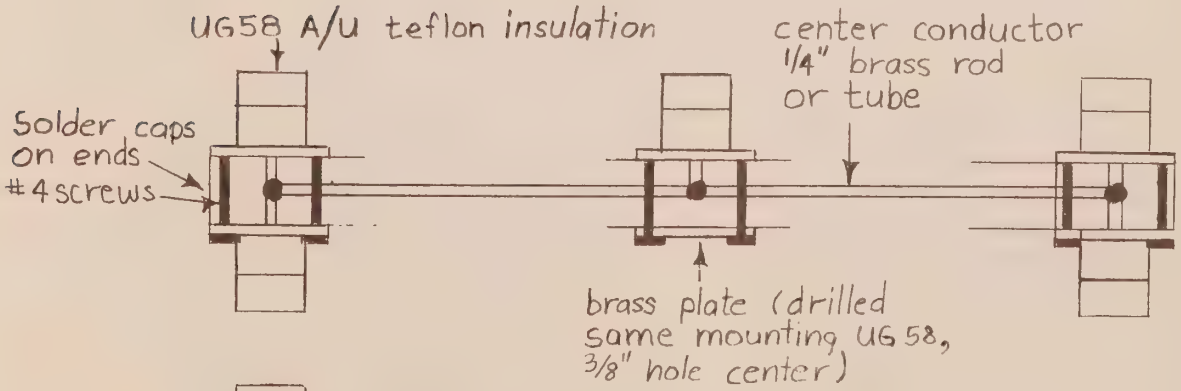

Fig. 6

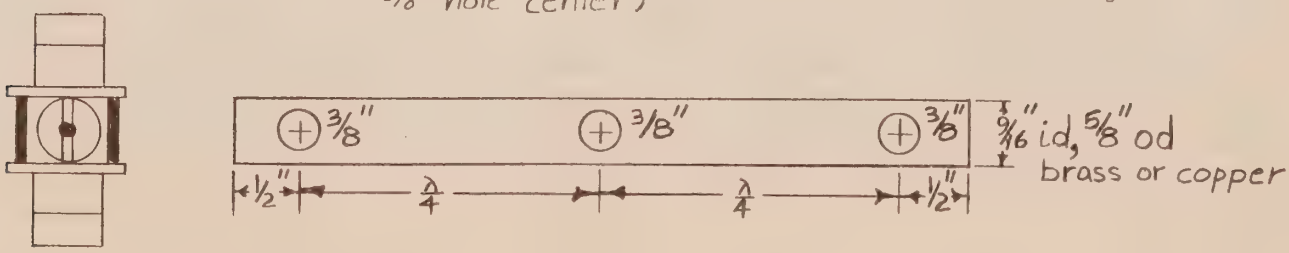

K6MYC-VK3ATN MOONBOUNCE CONTACT
by K7AAD

As you probably know by now, K6MYC (Mike) made a two-way on two meters with VK3ATN in Australia on Dec. 29. It was a monumental effort on both ends of the path. Remember that VK3ATN was limited to 150 watts. His mammoth antenna made it possible. K6MYC's antenna was not exactly small. It was made of 16, 16-element Cushcraft collinears with 64 home-brew half-wave directors added according to the method of Frank Jones. Mike says the barefoot collinear measured 11.7 db. over a dipole and with the addition of the directors he picked up 1.7 to 2 db. The array factor of 12 db. (3 db. increase each time total antenna size is doubled) gives a total gain of a little over 25 db. A diagram of the boom and cross-member layout is given below.

The antenna used 17 quarter-wave sections to keep the line impedance at 300 ohms. The array was fed in the center using a branching feed. Horizontal beamwidth, 5 degrees. Vertical beamwidth, 9 degrees. The array was located on a hillside at Stanford Univ. It was supported by two sets of three 4" x 4" x 8' redwood poles bolted together to form a tripod. The antenna was moveable in elevation from 55 to 90 degrees, azimuth from 253 to 255 degrees. Mike says that judging from the strength of his own echoes an array half that size will work for 2-meter moonbounce.

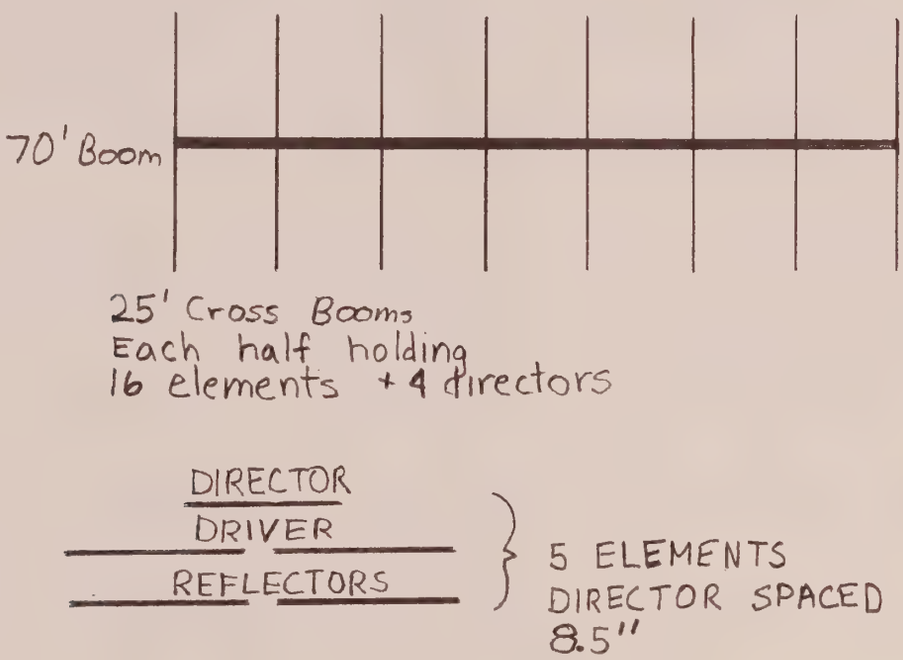

432 MOONBOUNCE GROUP READY FOR TESTS

A letter from WØWYZ in Denver asks us to help find a 432 m.b. group for them to work with. Ray and Tom, WØIUJ say they're ready. They say they have not yet heard their own echoes but think that they are not more than 3 db from it in normal times. Their rig is a pair of 4CX300As in a KW similar to the W1QWJ rig in Feb. 66 QST. They have a 2N2857 at the antenna followed by a transistor-nuvistor converter in the shack followed by a Drake R-4 and a 100 cps audio filter. They have 8 helices, 4 for receiving, 4 for transmitting. Ray says "antenna gain has been measured at 19-20 db. over isotropic indirectly. We measured two and then hoped for 3 db more." Ray would like to hear from anyone with access to a big dish operating at 432. Write him at 10698 Murray Drive, Denver, Colorado 80233.

W6DNG-F8DO 2-WAY MOONBOUNCE

On Jan. 27, W6DNG in Long Beach, Calif. and F8DO in Belleville, France made a two-way on 144 Mc. Time was 0600 to 0700 GMT. Bill said that signals were as high as 10 to 12 db. over the noise but mostly in the noise. He told me that they actually made it more than once in their series of skeds but I guess the tape or something was better for proof on the 27th. Bill changed his antenna to a 32 element extended-expanded collinear. It's his 62nd antenna tried for moonbounce. It is all metal and measured 18.3 (his measurement) over a half wave dipole (described in April 65 VHFER I think). VSWR is 1:1 and the antenna was very easy to tune. He says there was no change in the VSWR during elevation so nearby things apparently aren't bothering it. Total weight is 43 lbs. I have a color shot of it but contrast is not very good and doubt if it will print well. Bill said also it doesn't have the gain of his other antenna (8 yagis) but that the other whipped around in the wind so bad it was hard to aim. The collinear is probably the one in Frank Jones VHF Handbook.

AURORA DX

A letter from Dick Stroud, W9BRN says "Thought you would be interested in a SWL report just received from David Douglas, BRS 26325 in Dundee, Angus, Scotland. He reports reception of my 144 Mc. signals during the auroral opening of 10-3-66 while I was in QSO with Ed, W1HDQ at 1840 EST with reception lasting about one minute. He says the signal had auroral properties and fast flutter when received in Scotland. Antenna there is 32 over 32 yagi at 540' elevation.

I have a notation in my log that W1 and W2 signals were peaking exceptionally far east during this particular opening, otherwise everything seemed normal here. A copy of the SWL report is attached." The copy is not too clear and will be even worse when I print it but in view of the unusual nature of this report I thought it would be worthwhile letting you see the copy of the card. ㉿ K7AAD

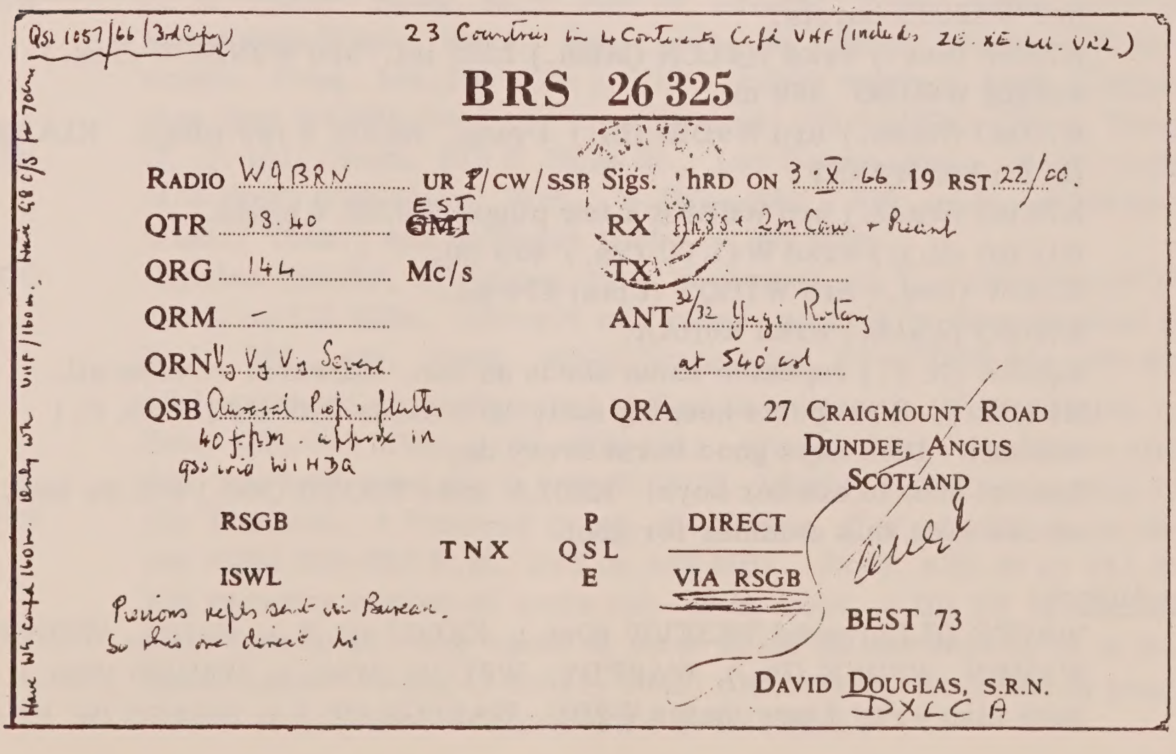
QSL 1057/66 (3rd Copy)

23 Countries in 4 Continents Confd VHF (includes ZE. XE. LU. VK2)

BRS 26 325

RADIO W9BRN UR ~~P~~/CW/SSB Sigs. HRD ON 3·X·66 19 RST 22/00.

QTR 18.40 ~~GMT~~ EST RX AR88 + 2m Conv. + Preamp

QRG 144 Mc/s TX

QRM –

ANT 32/32 Yagi Rotary at 540' asl

QRN Vy Vy Vy Severe

QSB Auroral Prop. flutter 40 f.p.m. approx in QSO with W1HDQ

QRA 27 CRAIGMOUNT ROAD, DUNDEE, ANGUS, SCOTLAND

RSGB / ISWL — TNX / PSE QSL — DIRECT / VIA RSGB

Previous repts sent via Bureau. So this one direct hi

BEST 73

DAVID DOUGLAS, S.R.N.

DXLCA

Have WAC confd 160m. Only WAC VHF/160m. Have 48 C/S for 70cm

OPEN BANDS

by Marilyn Wiseman, K8ALO

Geminids meteor showers during December reported as poor. Quadrantids showers and auroras in January proved to be great. Plenty of reports, many commenting that auroras seemed to be better than expected. Lots of cold weather throughout the states increased band activity. Plenty of cold weather here, but little snow. Keep those fine reports coming in. See you next issue. My address: Box 103, Petersburg, Ohio 44454

50 MHz Scatter:

Dec. '66	WB6GGK (Calif.) wrkd K7BBO, W7CNK (Wash.), WØEYE (Colo.), W7UFB (Wyo.), WA5CZM/5 (N.M.), K7ICW (Nev.), K6RIL (Calif.), 400 mi. K7BBO (Wash.) wrkd W7UFB, plus 8 Calif. stations.
Jan. "67	K7BBO (Wash.) wrkd K6RIL, K6IBY, K6JC, W6YKM, W6ABN, WB6GKK, W6NZX, WB6MUI. K7ICW (Nev.) wrkd WØEYE (Colo.), WØJXK/7 (Utah), WA5QHP, K5OOJ, K5YAW/5, WA5FDJ (Tex.), WAØEPZ (Mo.) W6PUZ, K6GJD (Calif.) hrd WA5CZM.

144 MHz.

Dec. '66	K7ICW (Nev.) wrkd 8 Calif. stations during the month.
Jan. '67	K7ICW (Nev.) wrkd many Calif. Stations hrd WØJXK/7, WA6TGH.

144 MHz Meteor Showers:

Dec. 11	K7ICW (Nev.) hrd K7ZIR (Ore.) 800 mi., K7MKW (Idaho) 900 mi.
Dec. 12	K7ICW (Nev.) wrkd K7ZIR (Ore.) 800 mi., hrd K7MKW (Idaho).
Dec. 13	K7BBO (Wash.) wrkd W6IBY (Calif.) hrd WØWYZ bursts. K1ABR (R.I.) hrd W8TIU, WØNXF. WB6GKK (Calif.) wrkd K7BBO (Wash.), K6HCP, WB6JEW, K6RIL, Calif. stations 400-425 mi. K7ICW (Nev.) hrd K7MKW, 900 mi. pings and letters. Al also reports hearing W5ORH (Okla.) wrking W6GDO 450 mi. and W9NIW/5 (Tex.) wrking W6GDO. K2HLA (N.Y.) ran 6 M/S skeds with nil results. Dick says very poor showers for east coast
Dec. 14	K1ABR (R.I.) hrd W8TIU, W5GUE/4. K7BBO (Wash.) wrkd WB6GKK, hrd WA6STS bursts.
Jan. 2	K7ICW (Nev.) wrkd WØLCN (Minn.) 1385 mi. hrd W9NIW/5 (Tex.) wrking W6GDO 500 mi.
Jan. 3	K7BBO (Wash.) hrd W9DID (Ill.) 1 ping, K6RIL a few pings. K1ABR (R.I.) hrd WØNXF.
Jan. 4	K7BBO (Wash.) hrd WØBFB a few pings, K6RIL 6 pings.
Jan. a8	K1ABR (R.I.) wrkd W4LTU (Va.) 450 mi.
Jan . 9	K7ICW (Nev.) hrd W7RQT (Utah) 470 mi.
Jan. 13	K7BBO (Wash.) wrkd K6HAA. K2NLA (N.Y.) repeated same skeds as Jan. showers, results nil. K1ABR (R.I.) reports keeping daily M/S skeds with K4QIF (N.C.) 650 mi. Dick says good burst every day. Special note to scatter boys: K2HLA says K1OYB (Me.) will be back on 144 MHz this summer for good.

144 MHz Aurora:

Nov. 7	W9YYF (ILL.) wrkd VE3EVW (Ont.), K2LGJ (N.Y.), K3JFL, W3BYF, W3MBN, K3HKK (Pa.), WAØFDY, WØLCN (Minn.), WØEMS (Neb.). Jack also wrkd 3 new states W2BU, WA2FGK (N.J.), W8AEC (W.Va.),

W5PZ (Okla.). Jack says 16 states were wrkd in a couple of hrs.

Jan. 7 K2HLA (N.Y.) reports during VHF S.S, good aurora. He wrkd W9UNN (Ill.) 950 mi., W9JGQ (Ill.) 1000 mi. also many 8s and 9s. W7JRG (Mont.) wrkd WØNXF, WØPDJ, KØMQS, WØBFB, WØEYE, WØIC, WØMOX, W7EGN, W7RQT, W7WVE, W7CJB, W7AZU and K7MKW (Idaho), state #26. Hrd K7ZIR.

Jan. 13 K2HLA (N.Y.) wrkd WØJVB (Mo.) state #28, plus many 8s and 9s. Hrd other stations wrking WØCUC (S.D.), WØEOZ (N.D.), hrd W4UHH (S.C.). Dick says at least the hard to work stations are keeping active. W7JRG (Mont.) wrkd W9AAG, K9AAJ, WØENC, WØWYZ, WØEYE, WØIC, WØMOX, hrd K9UIF. K1ABR (R.I.) wrkd W9ZIH (Ill.), W8QOH, W8FSO (Ohio), VE3ASO (Ont.). W9YYF (Ill.) wrkd W2BLV, W2BV (N.J.), K2TXB (N.Y.), W3LHF, W3LNA (Pa.), W8EDU (Ohio), WØEMS (Neb.) Jack also wrkd 3 new states WØCUC (S.D.), WØEKZ (Kan.), WØMOX (Colo.) 1000 mi. Hrd W4NUS (N.C.), W7JRG (Mont.). No luck wrking them. Jack says lots more stations within 400 mi.

432 MHz Aurora:

Jan. 7 W7JRG (Mont.) wrkd WØEYE (Colo.) for first Mont.-Colo. contact.

Jan. 13 W7JRG (Mont.) wrkd WØEYE (Colo.). K2YCO (N.Y.) wrkd W3RUE, K2CBA, K2GRI 2039-2138 EST. Charles says the beam was due north and quite critical. Slanting didn't help. Signals had no tone or buzz but just a hiss like white noise.

Skeds Wanted

W9YYF Jack Spencer, 205 Sherry Lane, Joliet, Ill. 60433, would like M/S or tropo skeds on 144 MHz. Rig 4CX250 B 500 watts, 8/8 J beam AM-CW-SSB

K7BBO Dave Robinson, 1716 S. 8th St., Tacoma, Wash. 98405, wants 144 MHz skeds for April M/S. Dave's freq. 144.086 ± 1 Kc.

K1ABR Dick Bromley, 12 High View Dr., Cranston, R.I. 02920, needs 144 MHz scatter skeds with Ark., La., Tenn., Miss., Ala. Dick also says still no takers on weekend 50 MHz scatter, but still hoping. Rig KW 6 ele wide space beam HQ 180 freq. 50.080 MHz.

K4EJQ J. G."Bunky" Botts, Rt.2, Box 72, Bristol, Tenn. 37620 would like skeds with Minn., Nebr., Kan., Md., Ia. Bunky now has KW to quad array. Freq. 144.026 MHz ± 1 Kc. Bunky wants to know if anyone else than W4HHK Paul and himself work 432-144MHz CW in Tenn.

K7ICW G. A. (Al) Olcott, 510 S. Rose St., Las Vegas, Nev. 89106 wants M/S skeds with Idaho, Wyo., N.Dak., Mo., Ark., La., extreme west Wisc., Tenn., and northern Mich. on 144 MHz.

K2YCO Charles Oneske, 27 Angora Dr., Rochester, N.Y. 14617 would like skeds on 432 MHz. 350-400 mi. range, especially New England states, N.J., Md., etc. Equip. HX30/xmtr conv. PP4CX250 B's 500 watts, 48 L extended expanded plane reflector collinear. Conv. Parks (of course) freq. 432.000 MHz. CW-SSB-AM. Charles has wrkd 6 new states thus far, has kept good skeds with W3RUE, VE2LI, K1JIX on nightly basis.

K2OVS Jay Buscemi, 8 Wexford Court, St. James, N.Y. wants skeds any week-day night 830-930 P.M. EST on 432 MHz. Freq. 432.00 or 431.85 MHz. Rig varactor tripler 20 watts out. H.B. conv. 5 DB NF 13 ele. 190' above sea level. Jay wants to know where all the activity is in the N.Y. Conn. area. Plenty of radar, radio altimeters, etc., but no people. Where are all the W1's, and W2's in this area?

ODDS & ENDS
by K7AAD

The big news since the last issue has been moonbounce, as far as VHFERs are concerned. As for us, the big news was the new regulations on mailing second class matter. It means its about 6 times as hard for us to get VHFER in the mail as before. Our whole filing system has to be re-arranged in the order of your zip codes. No longer are names alphabetical by states. So when you send in your complaints, as many of you so kindly do, please include your zip. Not only do we file differently but we have to examine all the zips and if there are 6 or more to one sectional center (and there are scads of sectional centers) they have to be bundled separately. We used to get away with about 50 bundles but now it will be more like 250. The upshot of all this is that our handling costs are increasing tremendously and at a buck a year we're not about breaking even. The mail volume here is too heavy--new subscriptions, sample issues, what happened to my _____ issue, I paid you $2 last August and I haven't gotten anything yet, etc. So VHFER has a new yearly rate in the U.S., namely $1.50 per year. I realize this is outlandishly high but you can blame it on the Great Society which now makes me pay $1.45/hr for the unskilled high-school help that handles VHFER. Of course all subscriptions paid at the previous rate are still valid at the previous price---a deal is a deal. Apparently a few think they are getting their money's worth as subscriptions still greatly outnumber expires. We will print 2400 this time, up 200 from last issue.

We get requests for odd-ball converters from time to time and normally we just say sorry, no got. But there are some things we do stock and one of them is the converter for the weather satellite at 136 Mc. You might not get your first choice of I.F. but we have it and it works well. Also we have resumed our 220 Mc. converter because the supply we built up about 3 years ago (25 units) has at last been exhausted. A number of our special converters, including the 220, go into commercial and medical telemetry or radio astronomy studies. Special frequencies are a pain and of course don't go at the amateur rate except for the weather satellite converter.

I will be out of the country most of March so no long distance calls please or don't expect a reply to conv. inquiries that require technical advice. Literature is always available.

Published by Parks Electronics Lab.
419 S.W. First
Beaverton, Ore. 97005

JOHN G. TROSTER 8-67-1
45 LAUREL AVENUE
ATHERTON, CA. 94025

Return Requested